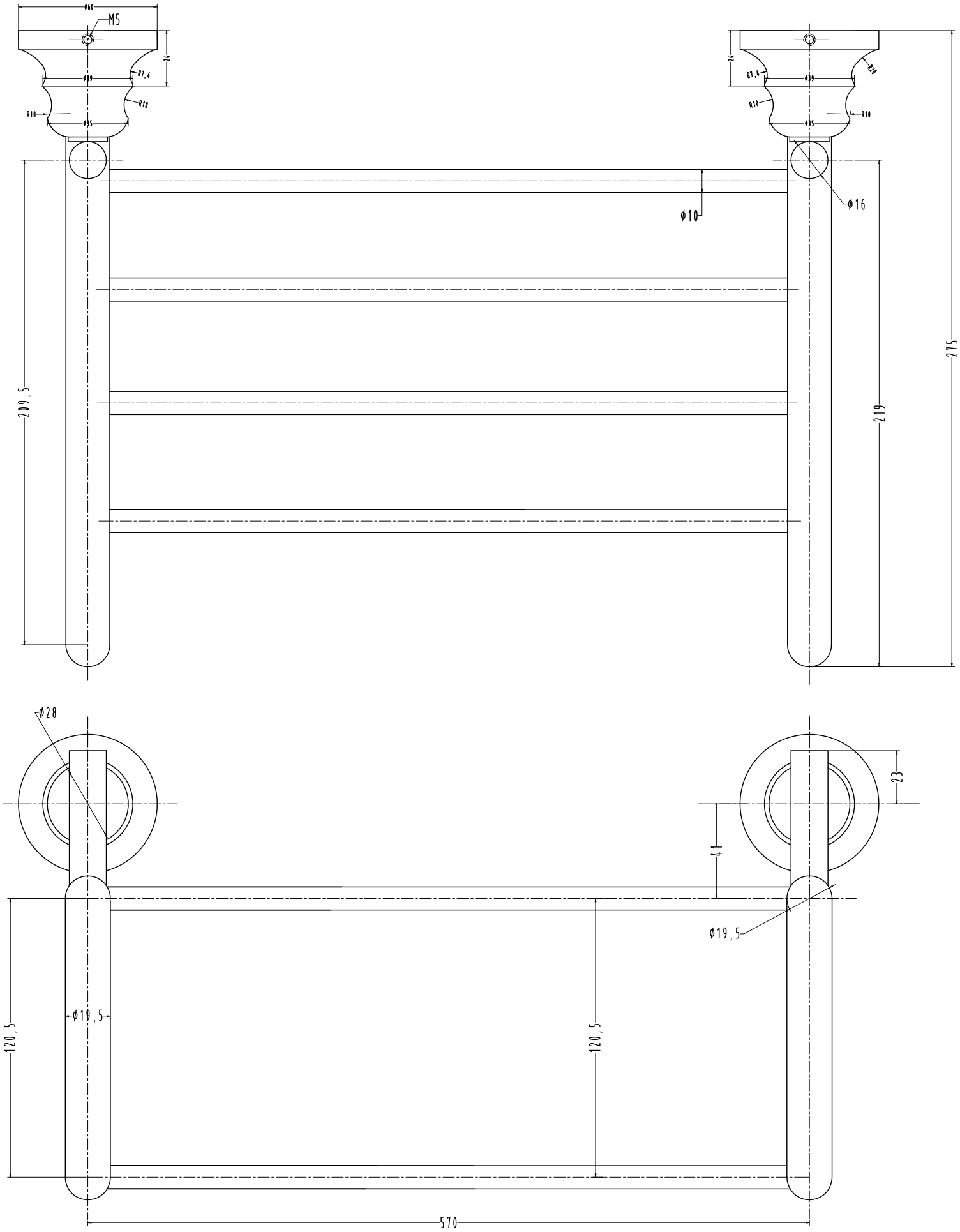

CAT NO: F890012
TOWEL SELF
BATH ACCESSORIES OTHELLO RANGE