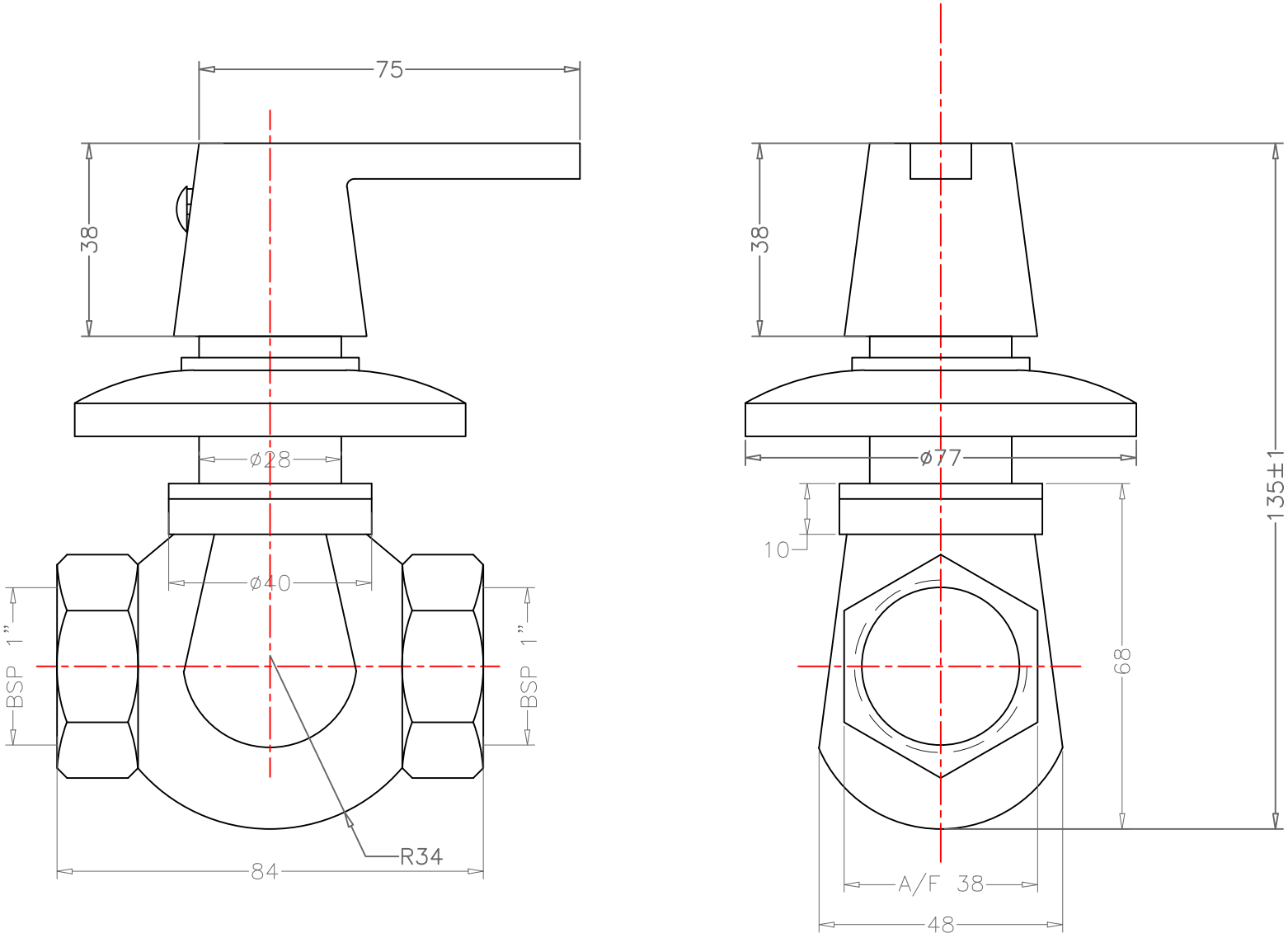

ADDONS- F850066
FLUSH COCK 25 MM BARREL
HANDLE (HALF TURN)
DATE-01.02.16