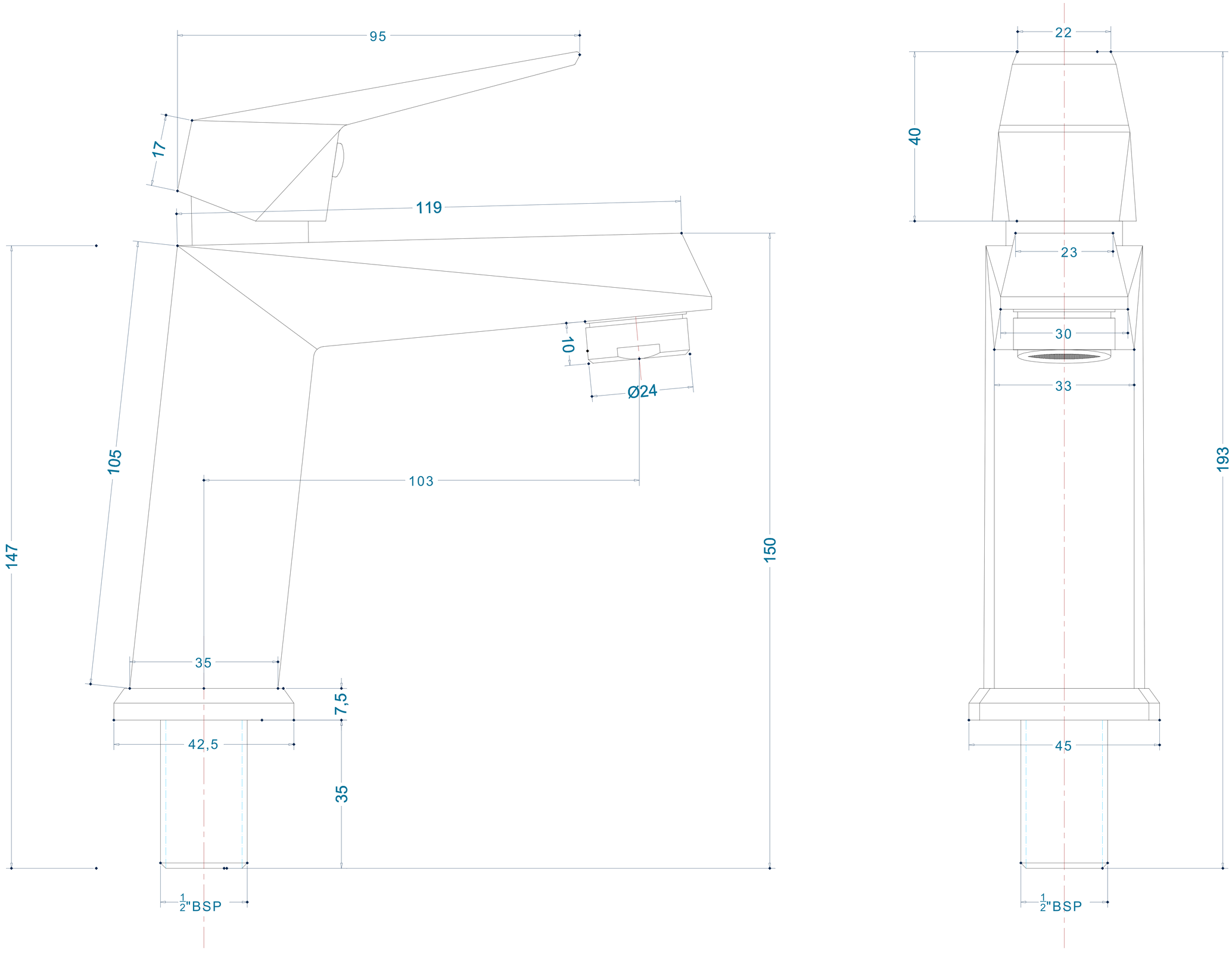

OROS-F350001-PILLAR COCK