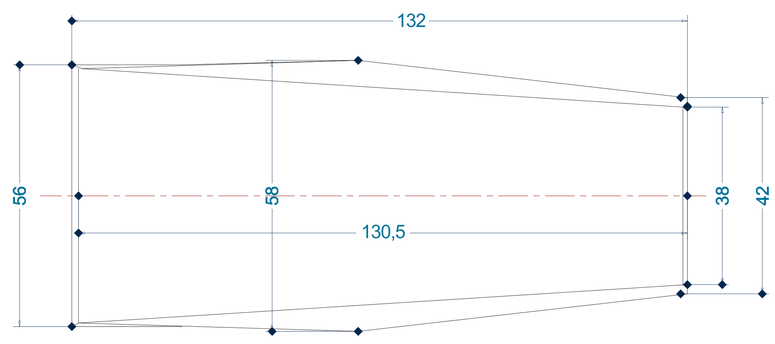

HANDLE TOP

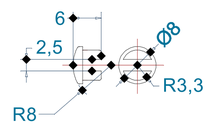

SCREW ABS CAP

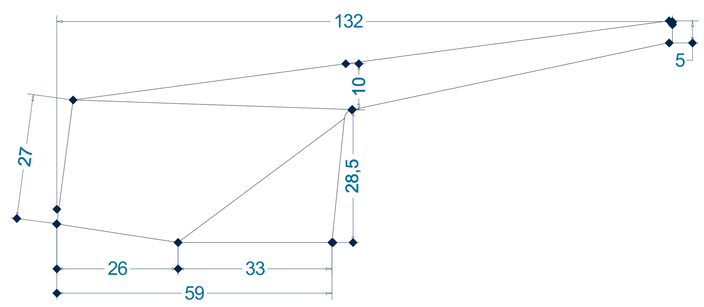

HANDLE SIDE

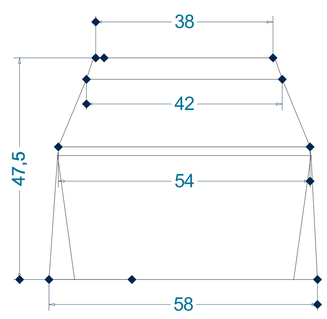

HANDLE FRONT

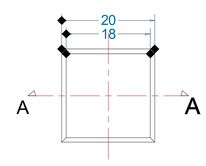

TIP TON KNOB

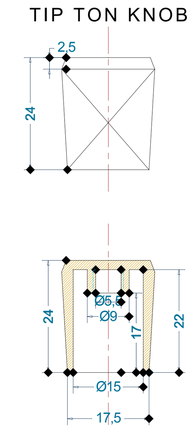

SECTION-AA

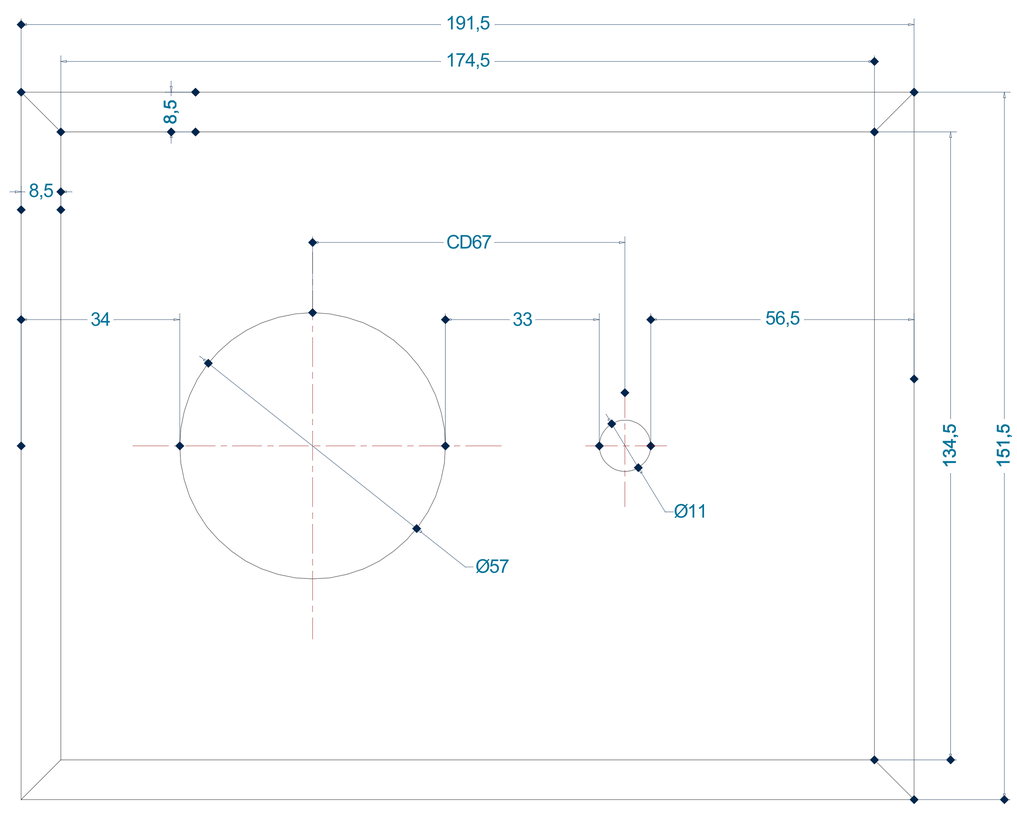

HI FLOW DIVERTOR PLATE

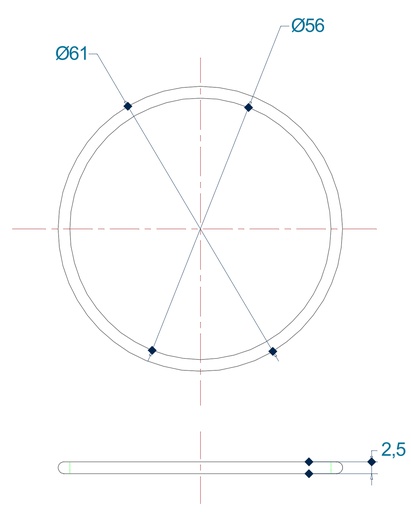

HI FLOW DIVERTOR PLATE 'O'RING

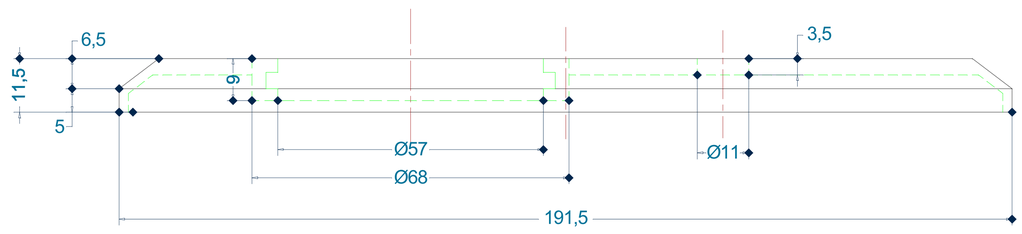

S.NO	QTY.	DESCRIPTION	PART CODE	MATERIAL	WEIGHT PER PIECE
01	01	HANDLE	512112	ZINC	
02	01	HI FLOW DIVERTOR PLATE	512113	BRASS	
03	01	TIP TON KNOB		BRASS	
04	01	HANDLE CAP		ABS	
05	01	PLATE 'O' RING		NBR	

ALL DIMENSIONS ARE IN MM

SCALE :	NTS
SHEET SIZE:	A4

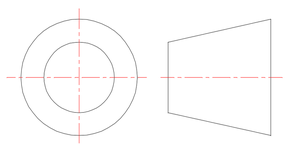

HSIL LIMITED

TIKRI TRADING DIVISION P.O. TIKRI KALAN,

DELHI -ROHTAK ROAD ,DELHI 110041

TITLE:OROS FINISHED DRAWING

DESCRIPTION: S/L HI FLOW DIVERTOR PLATE,HANDLE & KNOB

PRODUCT CAT. NO.:	F350010CP
PRODUCT SAP CODE:	
PRODUCT RAW MATERIAL:	BRASS
UPDATED ON:	05.08.2015
PRODUCT APPROVED WEIGHT WITH ACCESSORIES:	Grams

REVISION NO.	REASON FOR CHANGE	REVISION DATE	DRAWN BY	CHECKED BY	VERIFIED BY	APPROVED BY
			ENGINEER	ENGINEER	MANAGER	AGM

This Drawing remain the property of HSIL ltd.TTD.It must not,even in part,be reproduced or may available to un Athorised person without express concerned of HSIL Ltd. TTD and may be used only for agreed purposed

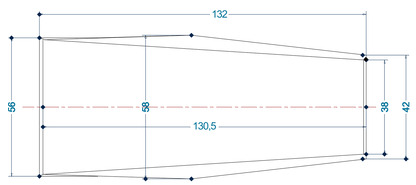

HANDLE TOP

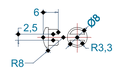

SCREW ABS CAP

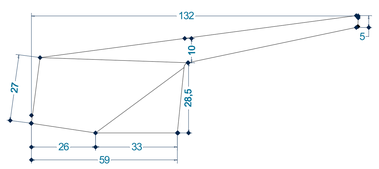

HANDLE SIDE

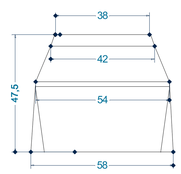

HANDLE FRONT

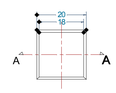

TIP TON KNOB

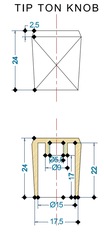

SECTION-AA

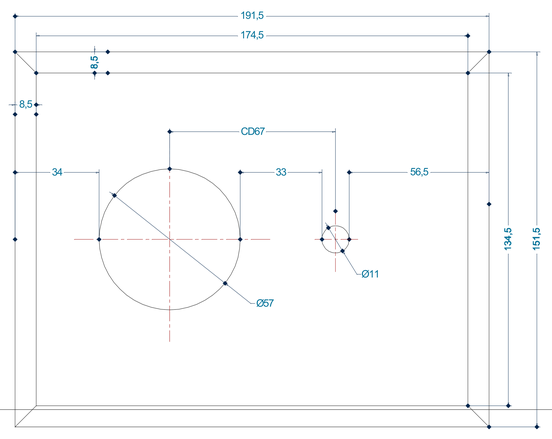

HI FLOW DIVERTOR PLATE

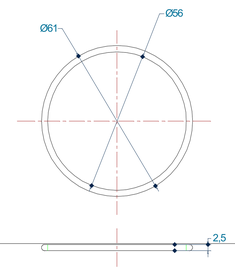

HI FLOW DIVERTOR PLATE 'O'RING

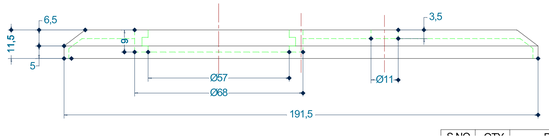

S.NO	QTY	DESCRIPTION	PART CODE	MATERIAL	WEIGHT PER PIECE