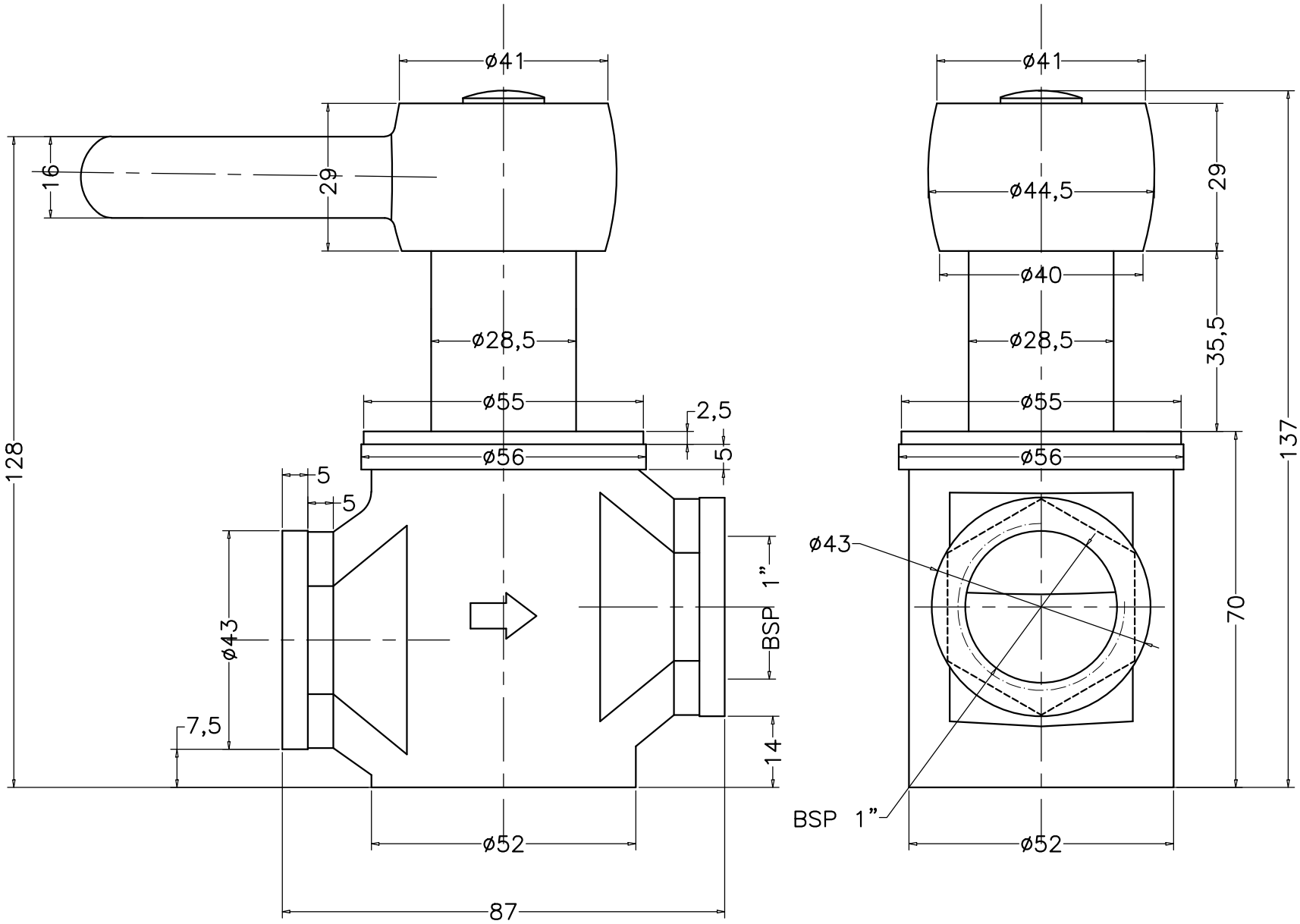

ADDONS– F850082

SELF CLOSING FLUSH COCK